Pan-American Open Quito 2019

(ECU Quito, 15-16 June 2019)

-48 kg

9 Judoka

Pool A

- MORAND, Priscilla MRI
- PAIVA DE LARA, Bianca BRA

Pool B

- SORIANO, Estefania DOM
- BARRIONUEVO, Aracely ECU

Pool C

- ALVAREZ, Luz COL
- PENA, Luz ECU

Pool D

- ALIYEVA, Leyla AZE
- ERAZO, Estefania ECU
- FRANCISCO, Eduarda BRA

1 MORAND, P. (MRI)
2 PAIVA DE LARA, B. (BRA)
3 SORIANO, E. (DOM)
4 BARRIONUEVO, A. (ECU)
5 ALVAREZ, Luz (COL)
6 PENA, Luz (ECU)
7 ALIYEVA, Leyla (AZE)
8 FRANCISCO, E. (BRA) 00 / Ippon 0 [1:28]
9 PAIVA DE LARA, B. (BRA) 00 s1 / Ippon 0 [3:14]
10 BARRIONUEVO, A. (ECU) 00 s2 / Ippon 0 s1 [6:41]
11 ALVAREZ, Luz (COL) Ippon 0 s1 / 00 s3 [4:25]
12 FRANCISCO, E. (BRA) 00 s3 / Ippon 0 s2 [6:07]
15 PAIVA DE LARA, B. (BRA) 01 s2 / 00 [4:00]
16 FRANCISCO, E. (BRA) 00 / Ippon 0 [2:53]
19 FRANCISCO, E. (BRA) 00 s1 / Ippon 0 s1 [2:49]

Repechage

- MORAND, Priscilla MRI
- SORIANO, Estefania DOM
- ALVAREZ, Luz COL
- PENA, Luz ECU
- ALIYEVA, Leyla AZE
- BARRIONUEVO, Aracely ECU

13 SORIANO, E. (DOM) 00 s1 / Ippon 0 [2:10]
14 PENA, Luz (ECU) Ippon 0 / 00 [2:19]
17 ALVAREZ, Luz (COL) 00 s1 / 01 [4:00]
18 BARRIONUEVO, A. (ECU) 00 s2 / Ippon 0 [2:25]

Results

1.	FRANCISCO, Eduarda	BRA
2.	PAIVA DE LARA, Bianca	BRA
3.	ALVAREZ, Luz	COL
3.	BARRIONUEVO, Aracely	ECU
5.	SORIANO, Estefania	DOM
5.	PENA, Luz	ECU
7.	MORAND, Priscilla	MRI
7.	ALIYEVA, Leyla	AZE

www.ippon.org (c) International Judo Federation IJF

Pan-American Open Quito 2019

(ECU Quito, 15-16 June 2019)

-52 kg

3 Judoka

			1	2	3		
1	GAMARRA CARBAJAL, Brillith	PER		+ 7	-	1 (7)	
2	ABUAN, Alaine	USA	-		-	0 (0)	
3	AOKI, Natsumi	JPN	+ 10	+ 10		2 (20)	

1	GAMARRA CARBAJAL, Brillith	PER
2	ABUAN, Alaine	USA

1 — GAMARRA CARBAJAL, Brillith PER
010 s1 / 000 s1 4:00

1	GAMARRA CARBAJAL, Brillith	PER
3	AOKI, Natsumi	JPN

2 — AOKI, Natsumi JPN
000 / 100 s2 4:58

2	ABUAN, Alaine	USA
3	AOKI, Natsumi	JPN

3 — AOKI, Natsumi JPN
000 / 100 s1 3:12

1. AOKI, Natsumi JPN
2. GAMARRA CARBAJAL, Brillith PER

www.ippon.org (c) International Judo Federation IJF

Pan-American Open Quito 2019

(ECU Quito, 15-16 June 2019)

-57 kg

5 Judoka

			1	3	5	Wins	Scores
1	HOLGUIN, Mariah	USA		+ 10	+ 10	2	(20)
3	RAHMING, Cynthia	BAH	-		-	0	(0)
5	VALENCIA, Karla	ECU	-	+ 10		1	(10)

			2	4	Wins	Scores
2	FULGENTES, Amelia	USA		+ 10	1	(10)
4	ARCOS, Diana	ECU	-		0	(0)

1 HOLGUIN, Mariah USA
3 RAHMING, Cynthia BAH
(1) HOLGUIN, Mariah — 100 / 000 s2 — 2:56

1 HOLGUIN, Mariah USA
5 VALENCIA, Karla ECU
(3) HOLGUIN, Mariah — 100 s1 / 000 — 2:21

3 RAHMING, Cynthia BAH
5 VALENCIA, Karla ECU
(4) VALENCIA, Karla — 000 s1 / 100 — 3:19

HOLGUIN, Mariah

2 FULGENTES, Amelia USA
4 ARCOS, Diana ECU
(2) FULGENTES, Amelia — 100 s1 / 000 s3 — 5:15

(6) HOLGUIN, Mariah — 010 s1 / 000 s1 — 4:00

1.

VALENCIA, Karla

ARCOS, Diana

(5) VALENCIA, Karla — 010 / 000 s1 — 4:00

3.

1. HOLGUIN, Mariah USA
2. FULGENTES, Amelia USA
3. VALENCIA, Karla ECU

www.ippon.org (c) International Judo Federation IJF

Pan-American Open Quito 2019

(ECU Quito, 15-16 June 2019)

-63 kg

5 Judoka

			1	3	5	Wins	Scores
1	SILVA, Mariana	BRA		+ 10	+ 10	2	(20)
3	KRAPMAN, Rachel	CAN	-		-	0	(0)
5	ORTIZ, Edith	ECU	-	+ 10		1	(10)

			2	4	Wins	Scores
2	GARCIA, Estefania	ECU		+ 10	1	(10)
4	PENAFIEL, Victoria	ECU	-		0	(0)

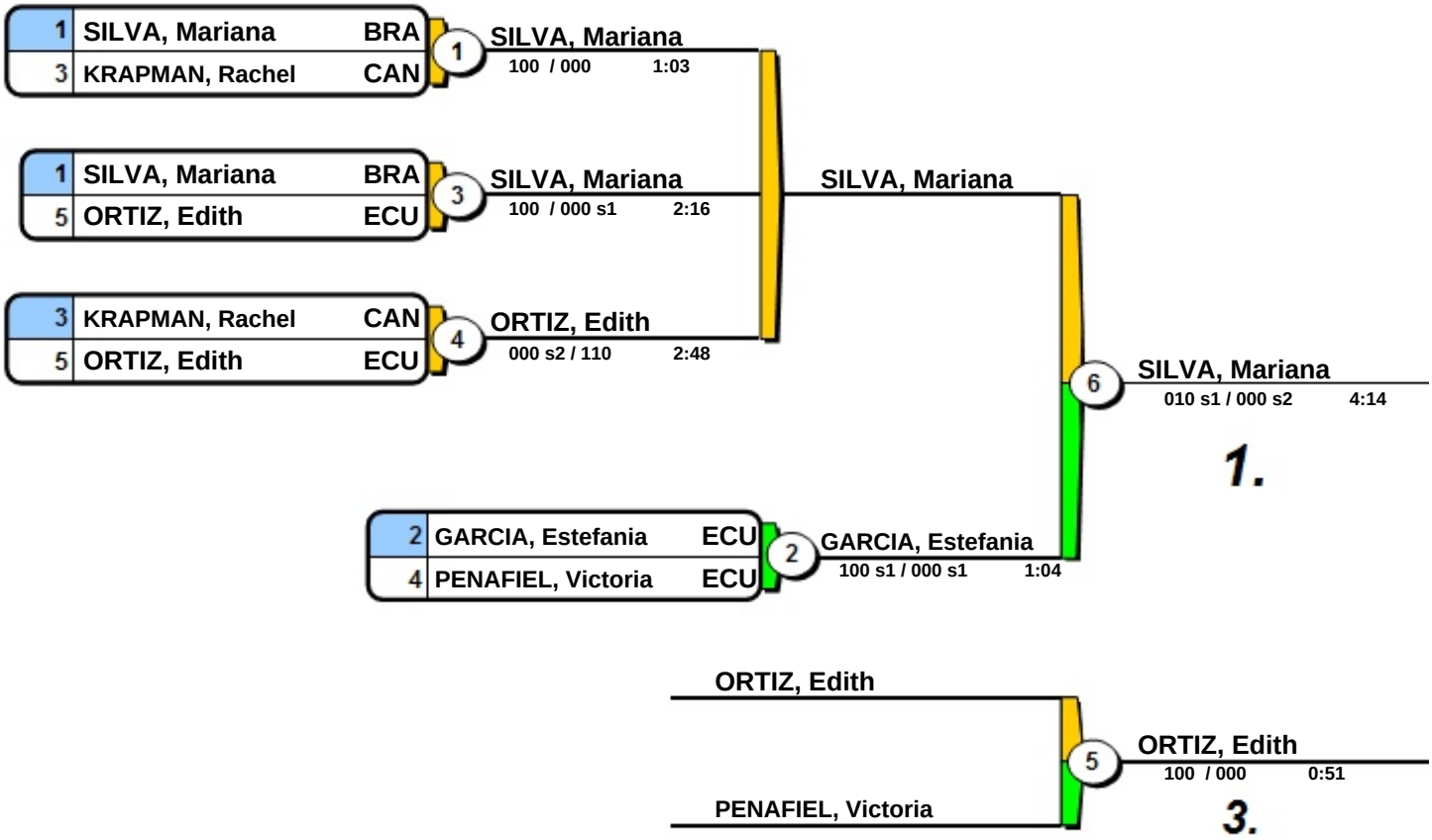

1. SILVA, Mariana BRA
2. GARCIA, Estefania ECU
3. ORTIZ, Edith ECU

www.ippon.org (c) International Judo Federation IJF

Pan-American Open Quito 2019

(ECU Quito, 15-16 June 2019)

-78 kg

4 Judoka

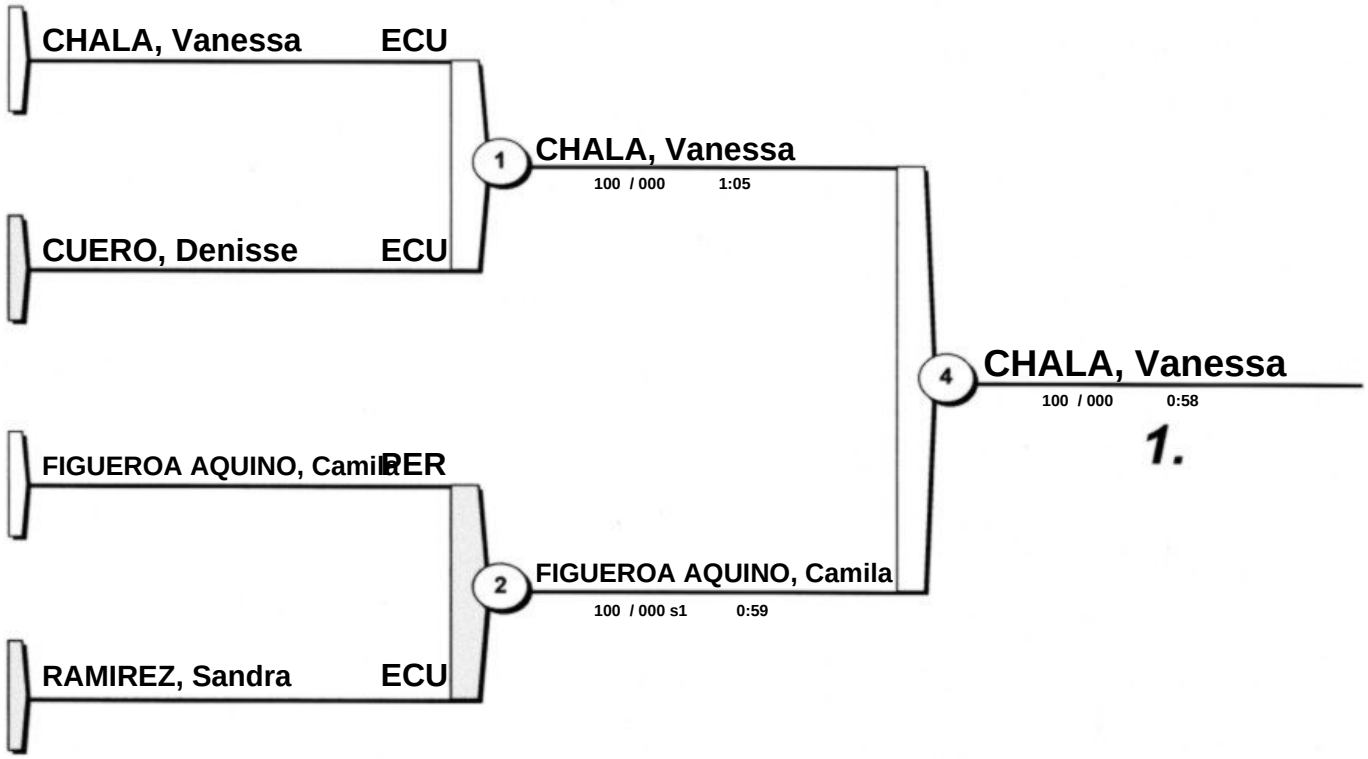

CUERO, Denisse

CUERO, Denisse
100 / 000 0:27

RAMIREZ, Sandra

1. CHALA, Vanessa ECU
2. FIGUEROA AQUINO, Camila PER
3. CUERO, Denisse ECU

www.ippon.org (c) International Judo Federation IJF

Pan-American Open Quito 2019

(ECU Quito, 15-16 June 2019)

+78 kg

3 Judoka

			1	2	3		
1	MOJICA, Melissa	PUR		+ 10	+ 10	2 (20)	
2	CUTRO-KELLY, Nina	USA	-		+ 10	1 (10)	
3	CALDERON, Nathaly	ECU	-	-		0 (0)	

1	MOJICA, Melissa	PUR
2	CUTRO-KELLY, Nina	USA

1 — MOJICA, Melissa PUR
100 / 000 s2 2:30

1	MOJICA, Melissa	PUR
3	CALDERON, Nathaly	ECU

2 — MOJICA, Melissa PUR
100 / 000 1:34

2	CUTRO-KELLY, Nina	USA
3	CALDERON, Nathaly	ECU

3 — CUTRO-KELLY, Nina USA
100 s1 / 000 s1 2:37

1. MOJICA, Melissa PUR
2. CUTRO-KELLY, Nina USA

www.ippon.org (c) International Judo Federation IJF